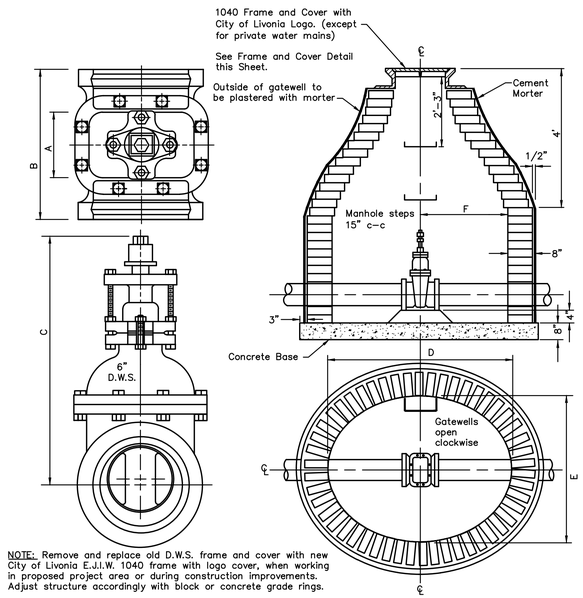

NOTE: Remove and replace old D.W.S. frame and cover with new City of Livonia E.J.I.W. 1040 frame with logo cover, when working in proposed project area or during construction improvements. Adjust structure accordingly with block or concrete grade rings.

SIZE	WEIGHT OF VALVE (lb)	A	B	C	D	E	F
4	120	5 1/2"	11 1/2"	16 3/16"			
6	200	5 3/4"	12 3/4"	21 1/16"	5'–0"	4'–0"	2'–6"
8	300	6 3/4"	13 3/4"	27 1/8"	5'–0"	4'–0"	2'–6"
10	378	6 1/2"	14"	29 7/8"	5'–6"	4'–6"	2'–9"
12	547	8"	15 1/2"	33 13/16"	5'–6"	4'–6"	2'–9"
16	1300	10 3/4"	19"	43 3/8"	6'–0"	5'–6"	3'–0"

EXISTING BRICK 6" TO 16" GATE–WELLS (REFERENCE DRAWING)

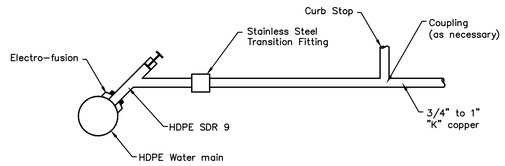

HOUSE LEAD DETAIL (HDPE TO COPPER)

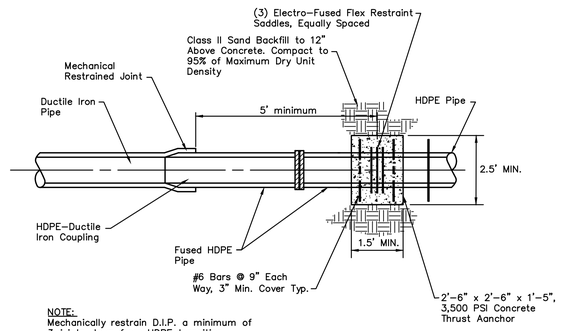

NOTE: Mechanically restrain D.I.P. a minimum of 3 joints down from HDPE transition.

HDPE–DUCTILE IRON PIPE CONNECTION

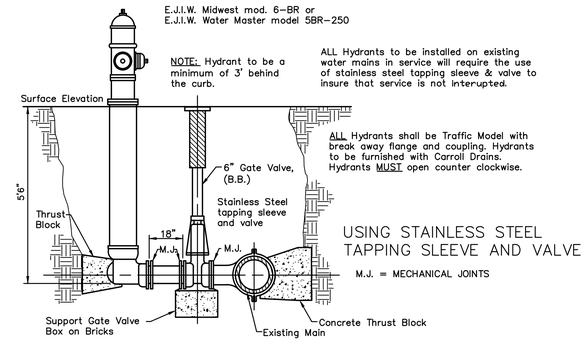

USING STAINLESS STEEL TAPPING SLEEVE AND VALVE

M.J. = MECHANICAL JOINTS

6" HYDRANT INSTALLATION ON EXISTING WATER MAIN

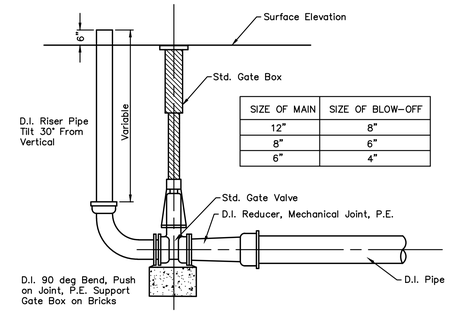

SIZE OF MAIN	SIZE OF BLOW–OFF
12"	8"
8"	6"
6"	4"

DETAIL OF TEMPORARY BLOW–OFF

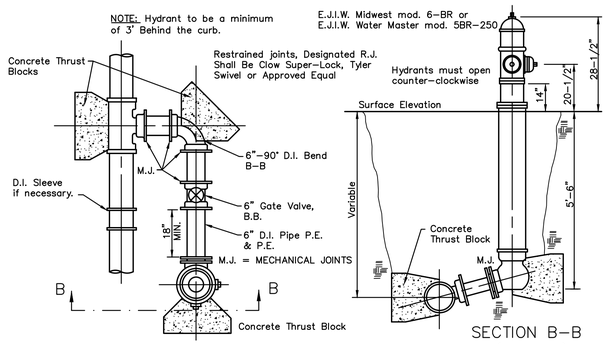

SECTION B–B (OFFSET)

DETAIL OF 6" HYDRANT INSTALLATION

NOTE: COVERS FOR PRIVATE WATER MAIN STRUCTURES SHALL REMAIN BLANK, AND NOT CONTAIN ANY REFERENCE TO THE CITY OF LIVONIA.

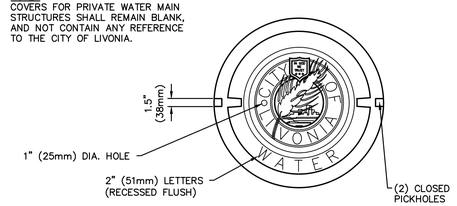

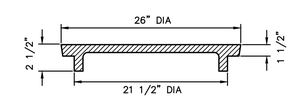

MATERIAL SPECIFICATION
COVER GRAY IRON, A.S.T.M. STD. SPEC. A – 48, CL 35B. Bearing Surfaces of cover and Frame shall be ground to prevent rocking. Casting shall not be coated.

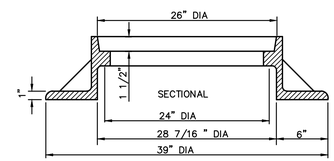

FRAME AND COVER DETAIL (E.J.I.W. 1040)

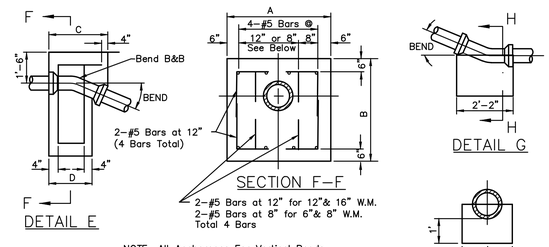

NOTE: All Anchorages For Vertical Bends Shall be Grade B (3000 p.s.i.) Concrete.

PIPE SIZE	BEND	A	B	C	D
6"	22 1/2°	3'–0"	3'–6"	1'–4"	1'–3"
8"	22 1/2°	3'–0"	3'–6"	1'–7"	1'–5"
12"	22 1/2°	4'–0"	4'–0"	1'–11"	1'–7"
12" – 16"	45°–30°	5'–0"	4'–6"	2'–9"	1'–10"
16"	22 1/2°	4'–0"	4'–0"	2'–1"	1'–8"

VERTICAL BENDS

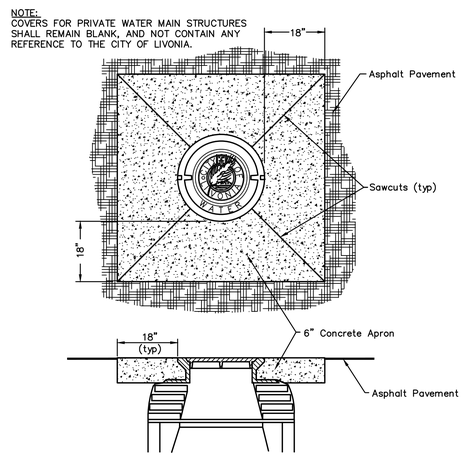

WATER MANHOLE APRON

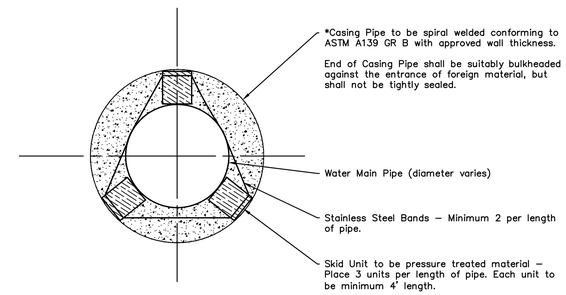

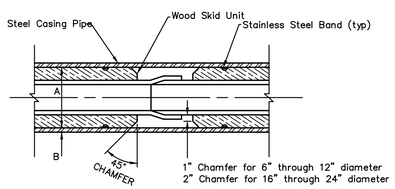

DIA. OF SANITARY SEWER (IN)	DIA. OF WATER MAIN (IN)	MIN. "A" (IN)	ROAD CROSSING MIN "B" (IN)	RAILROAD CROSSING MIN "B" (IN)
	6	16	0.375	0.375
	8	18	0.375	0.375
	12	24	0.375	0.438
10	16	26	0.375	0.500
12–15	20	30	0.375	0.500
18	24	36	0.375	0.500

NOTE:

1. The annular space within the casing pipe shall be filled approximately two thirds full of granular material Class II (M.D.O.T.) or pea pebble. The top of the Water Main or upper spaces, if any, shall not be in contact with the casing pipe.
2. Casing pipe diameter to be a minimum of 10" larger than water main diameter.

SKID UNIT AND CASING DETAIL FOR WATER MAIN

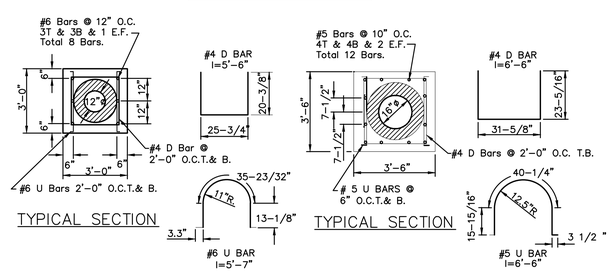

ENCASEMENT DETAIL FOR 12" D.I. WATER MAIN

Total Steel Per Lin. Ft. of Encasement = 50.45 Lbs
Concrete Per Lin. Ft. of Encasement = 0.30 Cu.Yd.

ENCASEMENT DETAIL FOR 16" D.I. WATER MAIN

Total Steel Per Lin. Ft. of Encasement = 43.23 Lbs
Concrete Per Lin. Ft. of Encasement = 0.39 Cu.Yd.

CONCRETE ENCASEMENT DETAILS

CITY OF LIVONIA
Department of Public Works, Engineering Division
33000 Civic Center Drive
Livonia, Michigan 48154
(734) 466–2570, (734) 466–2195 Fax

WATER MAIN STANDARD DETAILS

CITY OF LIVONIA, WAYNE COUNTY, MICHIGAN

2

DATE: 10/1975
SHEET 2 OF 2
CADD: dl
ENG: tz
PM:
TECH:
Water Main Detail.dwg

JOB No.

REVISIONS:	REV. DATE
Troy Sand Supply Removal	09/2006
Water Main Note Revision	09/2007
Mech. Joint Replaces Push–On Joints	02/2008
Misc. Note Revisions	02/2010
Misc. Note Revisions	12/2013
HDPE Connection Note Revision	11/2021